Technical data sheet

Product features

Steak grill electric 32x48 table durable chrome 230 V / 1N		
Model	**SAP Code**	00021113
KD 33 E	**A group of articles - web**	Grills and grill plates



- Griddle dimensions [mm x mm]: 320 x 480 + 320 x 380
- Griddle thickness [mm]: 10.00
- Container for liquid fat: Yes
- Independent heating zones: Separate control for top and bottom plate
- Maximum device temperature [°C]: 300
- Surface finish: durable chrome

SAP Code	00021113	**Net Weight [kg]**	40.00
Net Width [mm]	705	**Power electric [kW]**	6.000
Net Depth [mm]	395	**Loading**	230 V / 1N - 50 Hz
Net Height [mm]	482	**Griddle dimensions [mm x mm]**	320 x 480 + 320 x 380

RM GASTRO, s.r.o.,
Třída Čs. armády 816,
391 81 Veselí nad Lužnicí 1, ID:49825062

Technical data sheet

Technical drawing

Steak grill electric 32x48 table durable chrome 230 V / 1N		
Model	**SAP Code**	00021113
KD 33 E	**A group of articles - web**	Grills and grill plates

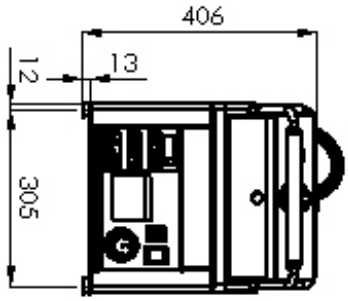

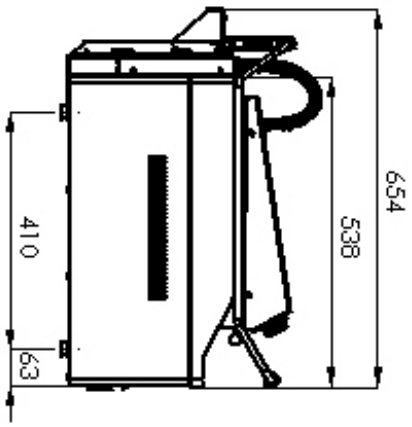

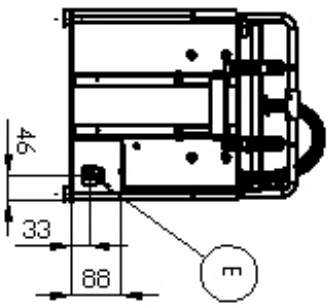

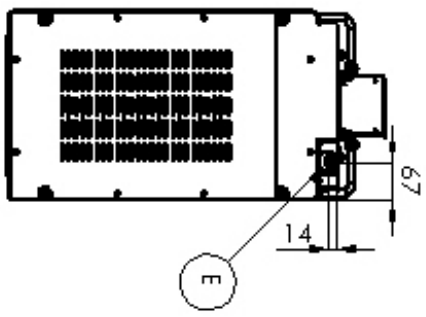

RM GASTRO, s.r.o.,
Třída Čs. armády 816,
391 81 Veselí nad Lužnicí 1, ID:49825062

Technical data sheet

Product benefits

Steak grill electric 32x48 table durable chrome 230 V / 1N		
Model	**SAP Code**	00021113
KD 33 E	**A group of articles - web**	Grills and grill plates

1 **Nationheres**

Only stainless steel used for food contact

- Absolutely stainless steel and non -magnetic design resists even weaker acids easier to fill hygiene standards (HACCP); Simple maintenance and cleaning

2 **Chrome 0.03mm**

non -stick dishes when roasting easier to clean the board

- Faster and easier work to operate a higher quality of food

3 **Self -controlled control for upper and lower heating**

can i control both areas independent of each other

- Better adjustability and saving el. Energy more uniformly cooking I can prepare more types of meals and faster on one device

4 **Upper contact area with Teflon canvas**

non -backed rollers
uniform warming the rolls

- faster and easier work for service
- faster preparation
- maintaining the shape of food
- faster closed surface of food from both sides of more juicy meat

RM GASTRO, s.r.o.,
Třída Čs. armády 816,
391 81 Veselí nad Lužnicí 1, ID:49825062

Technical data sheet

Technical parameters

Steak grill electric 32x48 table durable chrome 230 V / 1N		
Model	**SAP Code**	00021113
KD 33 E	**A group of articles - web**	Grills and grill plates

1. **SAP Code:**
   00021113
2. **Net Width [mm]:**
   705
3. **Net Depth [mm]:**
   395
4. **Net Height [mm]:**
   482
5. **Net Weight [kg]:**
   40.00
6. **Gross Width [mm]:**
   395
7. **Gross depth [mm]:**
   705
8. **Gross Height [mm]:**
   482
9. **Gross Weight [kg]:**
   44.00
10. **Device type:**
    Electric unit
11. **Construction type of device:**
    Table top
12. **Power electric [kW]:**
    6.000
13. **Loading:**
    230 V / 1N - 50 Hz
14. **Protection of controls:**
    IPX4
15. **Material:**
    AISI 430
16. **Indicators:**
    operation and warm-up
17. **Surface finish:**
    durable chrome
18. **Maximum device temperature [°C]:**
    300
19. **Minimum device temperature [°C]:**
    50
20. **Griddle dimensions [mm x mm]:**
    320 x 480 + 320 x 380
21. **Griddle thickness [mm]:**
    10.00
22. **Container for liquid fat:**
    Yes
23. **Independent heating zones:**
    Separate control for top and bottom plate
24. **Uniform heating:**
    Yes
25. **Cross-section of conductors CU [mm²]:**
    2,5

RM GASTRO, s.r.o.,
Třída Čs. armády 816,
391 81 Veselí nad Lužnicí 1, ID:49825062